Date:

Client:

Project:

VOLA product: RB1EN

RB1EN

Basin pillar tap with on-off sensor for 'hands free' operation with an external mains transformer. Valve box, VR2617 included.

Ada approved.

Flow

	Bar:	1.0	2.0	3.0	4.0	5.0
RB1EN	(l/min)	2.9	4.1	5.0	5.0	5.0
RB1EN [1)]	(l/min)	2.6	3.7	4.5	4.5	4.5
Water saver VR16WS	(l/min)	1.1	1.6	1.9	1.9	1.9

[1)] USA Standard

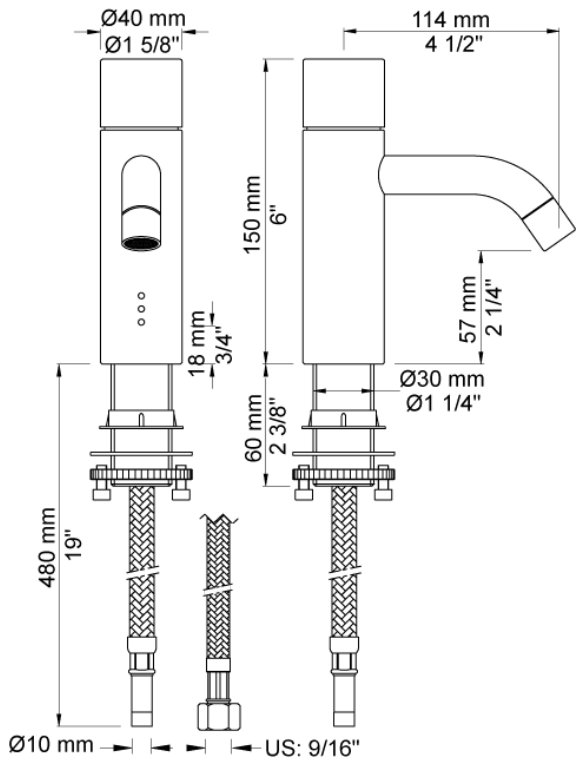

Available in colors

Color 02, Grey
Color 04, Light blue
Color 05, Orange
Color 06, Light green
Color 08, Yellow
Color 09, Dark grey
Color 12, Mocca
Color 14, Bright red
Color 15, Dark blue
Color 16, Polished chrome
Color 17, Gloss black
Color 18, White
Color 19, Natural brass
Color 20, Brushed chrome
Color 21, Carmine red
Color 25, Pink
Color 27, Matt black
Color 40, Brushed stainless steel

Date:

Client:

Project:
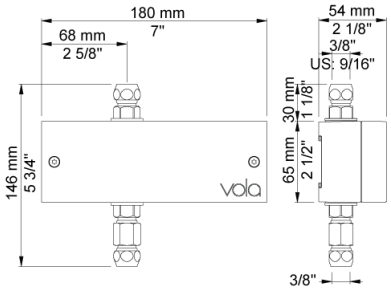
VR2617
Valve box for electronic RB1E/4000/4300/4800